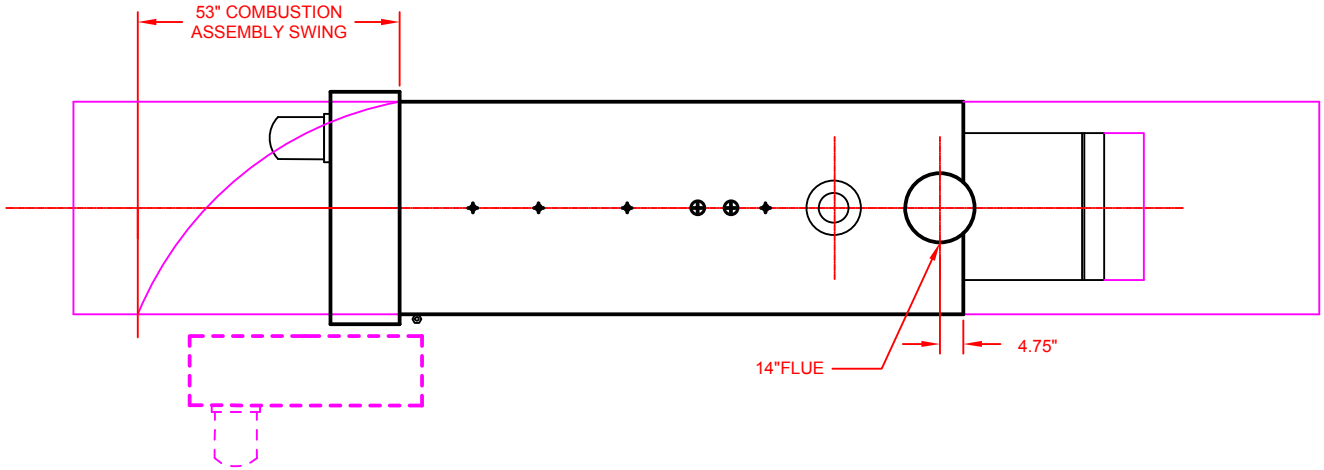

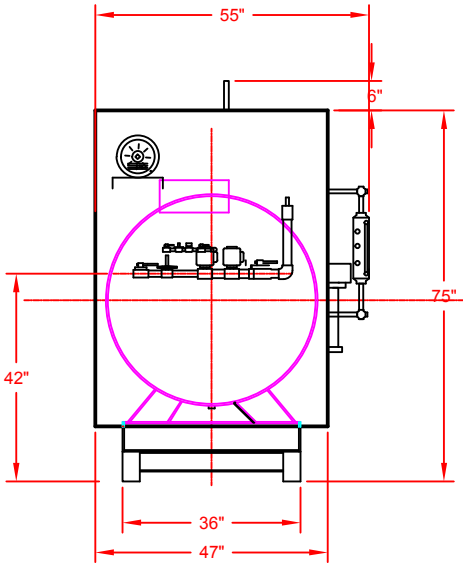

FRONT VIEW

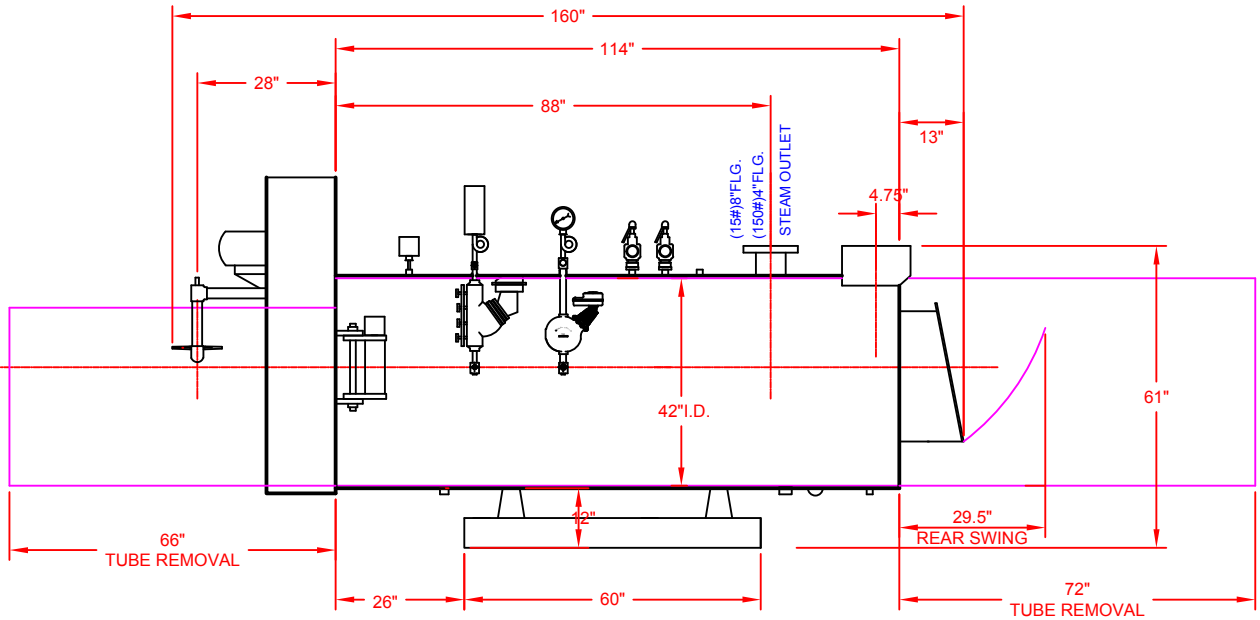

Sattler
918 WEST WALNUT STREET
DANVILLE, KY 40422
PHONE: (859) 236-3181
FAX: (859) 236-3184

TEMPLATE LAYOUT
100 HP S-SERIES

UNLESS OTHERWISE SPECIFIED
DIMENSIONS ARE IN INCHES
TOLERANCES: FRACTIONS ± 1/32
X.XX ± .010
X.XXX ± .005
ANGLES ± 1°
DO NOT SCALE DRAWING

PROPRIETARY INFORMATION

REV.	DATE:	DESCRIPTION OF CHANGE	DRAWN:	APPROVED:

WEIGHT: N/A
MATERIAL: N/A
FINISH: N/A
DWG SIZE: N/A
SCALE: --
DRAWN BY: DTB
DATE: 9/30/16
APPROVED BY:
DATE:
SHEET: 01 of 01
DRAWING NUMBER: SK-2749
REV.